Sanitary Shell & Tube Heat Exchanger

35 Series Single Tubesheet

Model 00455

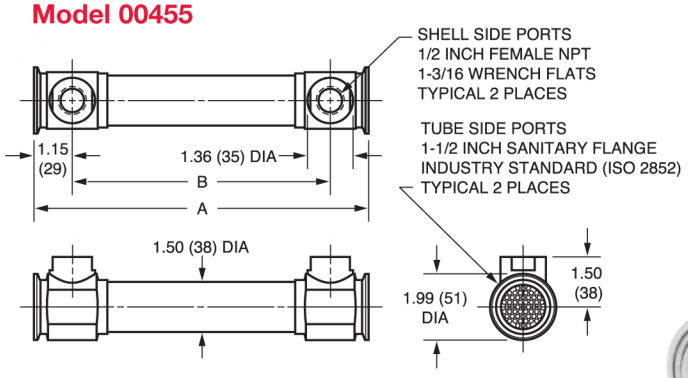

Typical Pressure Drop For Water

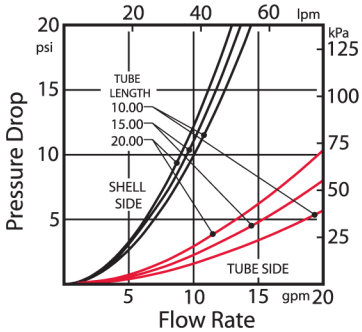

Model 00456

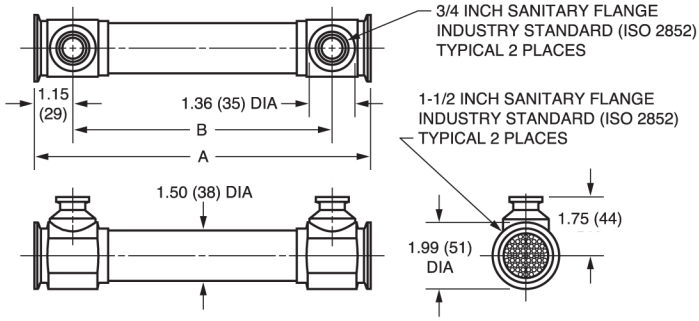

Maximum Operating Conditions

Pressure*	Tube Side	1,200 psi	(8,300 kPa)
	Shell Side	800 psi	(5,500 kPa)
Temperature		800°F	(425°C)
Pressure for Steam Service		125 psi	(860 kPa)

Fluid Temperature Difference

$(T_{Hot})_{Ave} - (T_{Cold})_{Ave} \leq 125°F\ (70°C)$

* Pressure rating may be limited by sanitary flange clamp. Refer to clamp manufacturer's literature.

Tube Count	Tube Length in (mm)	Model #	Electropolished	Shell Side Fittings NPT	Shell Side Fittings Flange	A in (mm)	B in (mm)	Weight Empty lb (kg)	Transfer Area ft² (m²)
55	10.00 (254)	00455-1	•	•		10.04 (255)	7.74 (197)	2.5 (1.1)	1.43 (.13)
		00455-7		•					
		00456-1	•		•				
		00456-4			•				
	15.00 (381)	00455-2	•	•		15.04 (382)	12.74 (324)	3.2 (1.4)	2.18 (.20)
		00455-8		•					
		00456-2	•		•				
		00456-5			•				
	20.00 (508)	00455-3	•	•		20.04 (510)	17.74 (452)	3.9 (1.8)	2.93 (.27)
		00455-9		•					
		00456-3	•		•				
		00456-6			•				