Sanitary Shell & Tube Heat Exchanger

35 Series Double Tubesheet

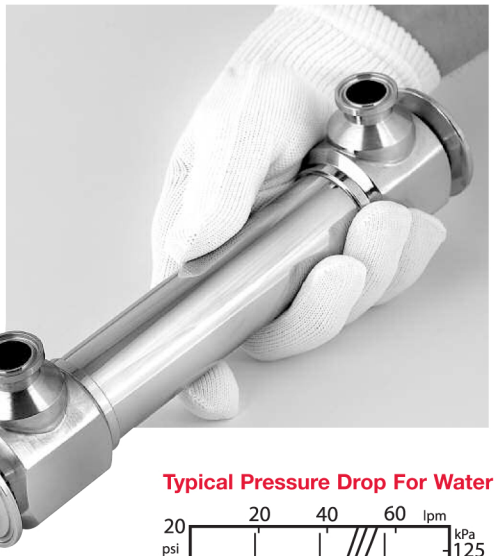

Model 01095

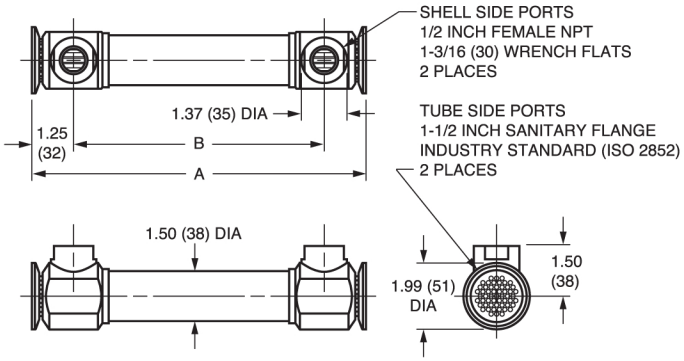

Model 01085

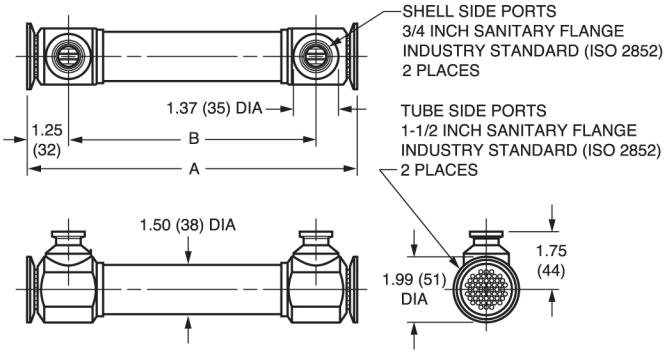

Typical Pressure Drop For Water

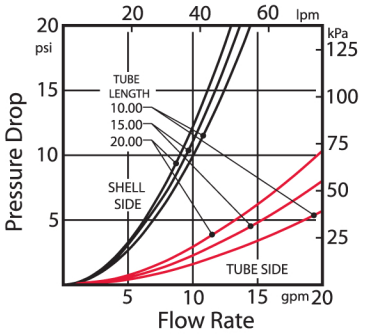

Maximum Operating Conditions

Pressure*	Tube Side	1,200 psi	(8,300 kPa)
	Shell Side	800 psi	(5,500 kPa)
Temperature		800°F	(425°C)
Pressure for Steam Service		125 psi	(860 kPa)

Fluid Temperature Difference

$(T_{Hot})_{Ave} - (T_{Cold})_{Ave} \leq 125°F\ (70°C)$

* Pressure rating may be limited by sanitary flange clamp. Refer to clamp manufacturer's literature.

Tube Count	Tube Length in (mm)	Model #	Electropolished	Shell Side Fittings NPT	Shell Side Fittings Flange	A in (mm)	B in (mm)	Weight Empty lb (kg)	Transfer Area ft² (m²)
55	10.00 (254)	01095-1	•	•		10.00 (254)	7.50 (190)	3.5 (1.6)	1.33 (.12)
		01095-4		•					
		01085-1	•		•				
		01085-4			•				
	15.00 (381)	01095-2	•	•		15.00 (381)	12.50 (318)	4.4 (2.0)	2.08 (.19)
		01095-5		•					
		01085-2	•		•				
		01085-5			•				
	20.00 (508)	01095-3	•	•		20.00 (508)	17.50 (444)	5.3 (2.4)	2.83 (.26)
		01095-6		•					
		01085-3	•		•				
		01085-6			•				